1643 Connecticut Avenue, NW
Washington, DC

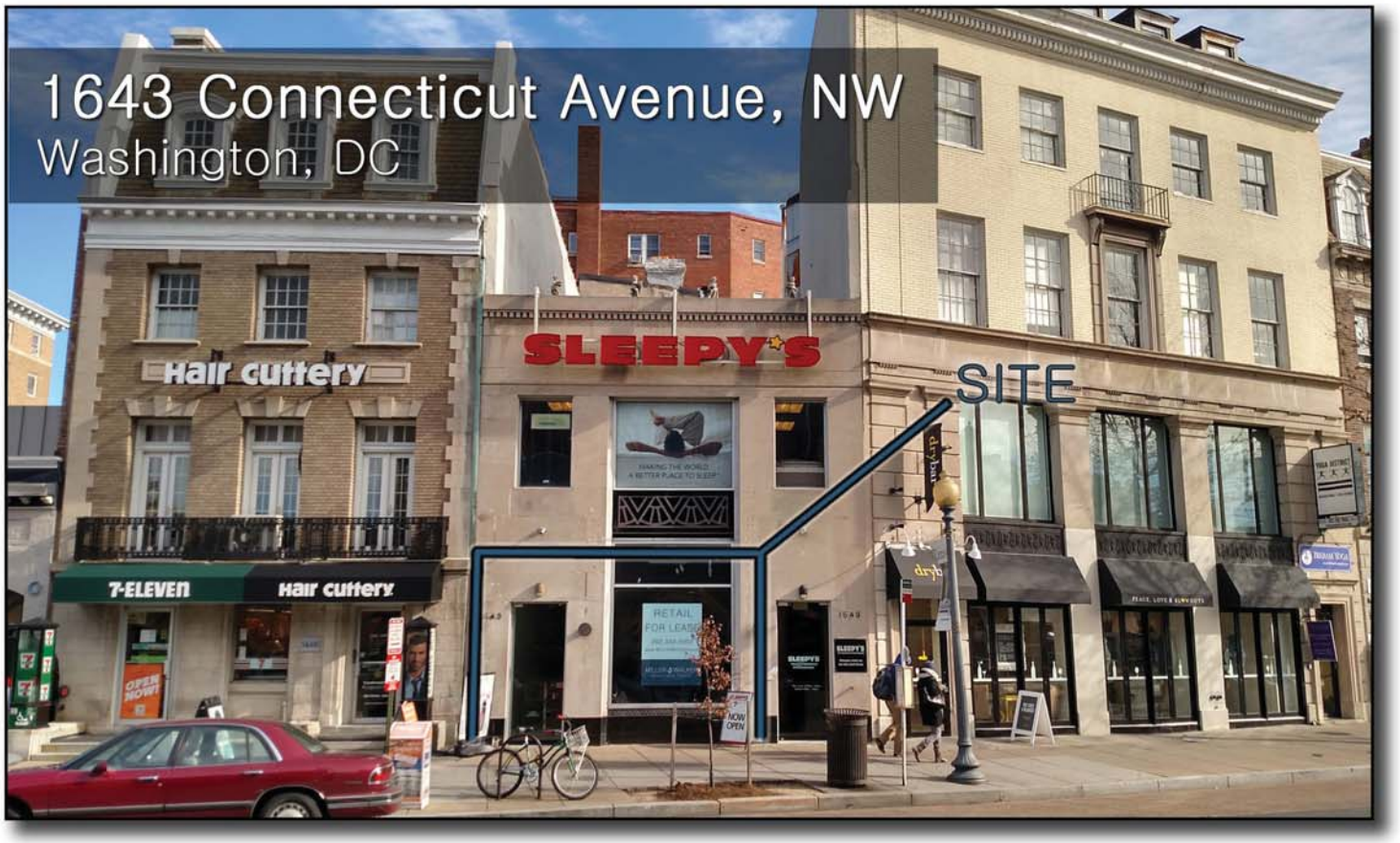

- 1,975 square feet of street level retail space
- $100 NNN per square foot
- Prominent storefront on Dupont Circle's strongest retail block
- Nearby restaurants and retailers include Circa, Drybar, Chipotle, La Tomate, Starbucks, Yoga District and Sette Osteria
- Located steps from the Dupont Circle Metro
- Strong seven day foot traffic with a steady mix of office, residential and tourists

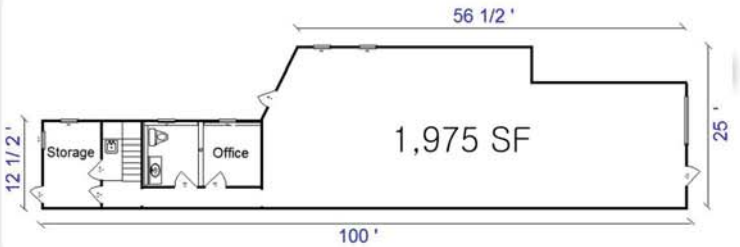

Bill Miller
202.333.0339
bill@millerwalker.com

MILLER WALKER
RETAIL REAL ESTATE

Alex Walker
202.333.0079
alex@millerwalker.com

2715 M STREET, NW • SUITE 200 • WASHINGTON, DC 20007 • 202.333.0303 • www.MILLERWALKER.COM

1643 Connecticut Avenue, NW
Floor Plan

MILLER WALKER
RETAIL REAL ESTATE

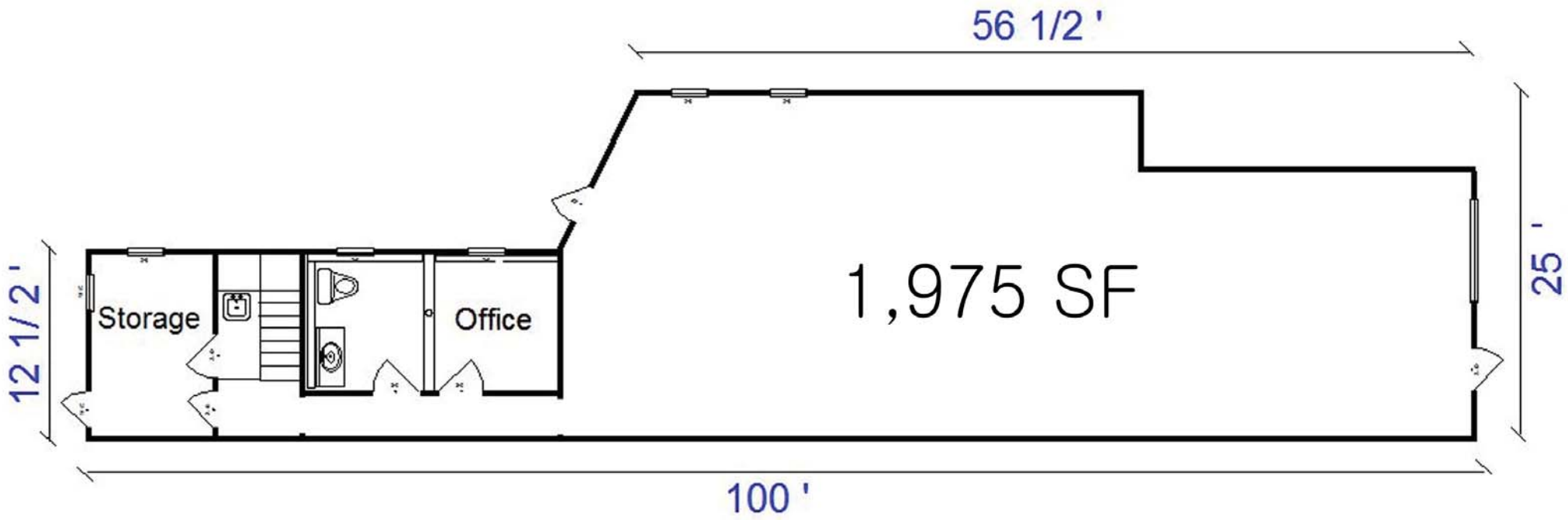

NW

DUPONT CIRCLE

DUPONT CIRCLE IS ONE OF DC'S MOST DIVERSE and celebrated neighborhoods with boutique shops and cozy restaurants. The area boasts extremely walkable blocks with easy access to housing, offices, and the Metro. Dupont Circle features more than 150 restaurants, 100 shops and countless services that range from local craft stores and international foods to food trucks and fine dining – and everything in between.

INTERNATIONAL DESTINATION

More than 70 embassies are located in and around Embassy Row.

HOSPITALITY & CULTURE

From around the globe visitors stay in the numerous hotels and visit world class museums, including the Phillips Collections, President Woodrow Wilson House, Anderson House, and the Heurich House Museum.

52%	population aged 20-34
90%	population with Bachelor's Degree or higher
$137k	average household income

EVENTS & FESTIVALS

- 17th Street Festival (Fall)
- Dupont Circle Farmers Market (Sundays)
- Dupont Circle Tree Lighting (December)
- First Friday Dupont - art walk in galleries & retailers (monthly)
- Taste of Dupont (Spring)

	0-½ mi	0-1 mi	0-3 mi
POPULATION			
Population	21,299	80,679	345,552
Male	50%	50%	49%
Female	50%	50%	51%
High School Graduate +	99%	96%	94%
Bachelor's Degree +	90%	84%	74%
Graduate/Professional Degree	59%	54%	45%
HOUSEHOLDS			
Households (HH)	14,128	45,958	171,936
Average HH Size	1.5	1.6	1.9
Owner-occupied	35%	34%	37%
Renter-occupied	65%	66%	63%
Median HH Value	$663,793	$703,646	$659,301
INCOME			
Average HH	$136,988	$126,381	$116,436
Median HH	$100,000	$92,281	$86,318
HH Income <$50k	22%	28%	30%
HH Income $50–$75k	16%	14%	14%
HH Income $75k+	63%	58%	56%
Average HH Disposable	$91,777	$85,679	$80,754
AGE			
Age < 20	4%	11%	15%
Age 20–34	52%	47%	40%
Age 35–64	35%	33%	34%
Age 65+	10%	9%	11%
Median Age (years)	33.4	32.6	33.3
CONSUMER EXPENDITURES ($ thousands)			
Apparel	$64,856	$193,504	$662,533
Computers & Accessories	$7,247	$21,669	$74,066
Entertainment & Recreation	$81,706	$245,673	$848,761
–Pets	$12,571	$37,703	$130,641
Food at Home	$135,264	$404,849	$1,400,197
Food away from Home	$91,462	$273,322	$934,306
Health Care	$101,829	$307,076	$1,077,849
–Medical Care	$45,165	$136,411	$478,662
Home Improvement	$38,691	$118,966	$420,082
Household Furnishings	$27,396	$81,713	$279,908
Personal Care Products	$12,274	$36,450	$125,164
Vehicle Maint. & Repair	$27,385	$82,052	$284,080
AVAILABLE VEHICLES PER HH[1]			
0	52%	48%	37%
1	42%	43%	47%
2-3	7%	9%	16%
4+	0%	0%	1%

METRORAIL BOARDINGS (Avg. weekday)

Dupont Circle **20,415**

WALKSCORE

99 Walker's Paradise

CAPITAL BIKESHARE ARRIVALS

Average Monthly (10/2014-9/2015) **25,813**

Source: ESRI, 2015 Estimates & Projections
1. American Community Survey (2009-2013), values are rounded to nearest whole percent

CONTACT
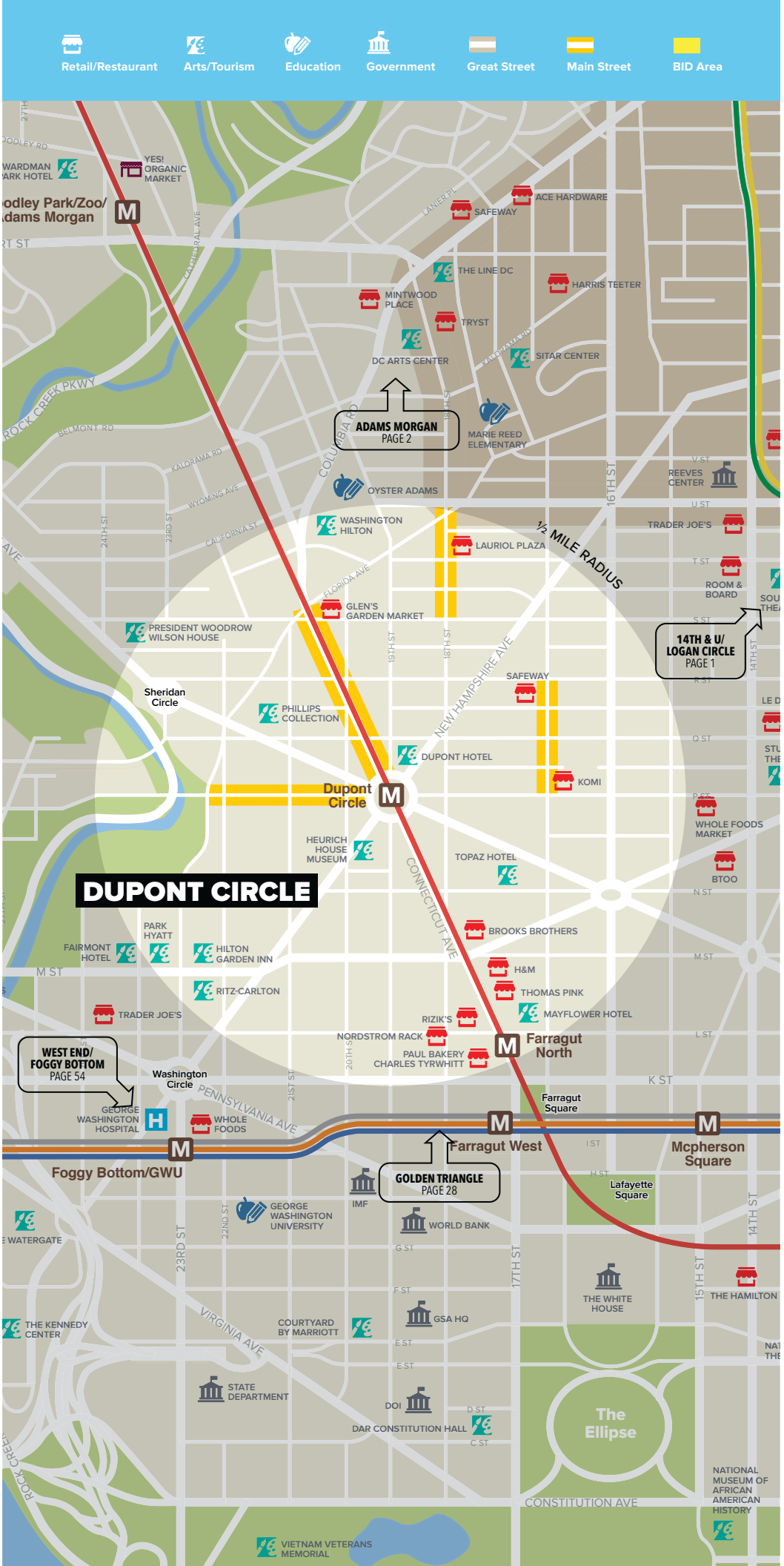
Historic Dupont Circle Main Streets
Bill McLeod, Executive Director
(202) 656-4487, execdirector@dupontcircle.biz
www.DupontCircleMainStreets.org